ONS SE 4G MM

4.25Gbps SFP Optical Transceiver, 500m Reach

Features

- Single 3.3 V supply
- Up to 500m on 50/125μm MMF, 300m on 62.5/125μm MMF
- Supports 1.06/2.125/4.25Gb/s Fibre Channel Operation
- Gigabit Ethernet compatible
- 850nm VCSEL laser transmitter
- SFP MSA SFF-8074i compliant
- Digital Diagnostic SFF-8472 compliant
- Compatible with RoHS
- Operating case temperature:

  Standard : 0 to +70°C

Applications

• Tri Rate 1.06 / 2.125 / 4.25Gbp/s Fibre Channel

• 1.25Gbp/s 1000Base-LX Ethernet and 1000Base-LX10

Description

The transceiver consists of three sections: a850nm VCSEL laser transmitter, a PIN photodiode integrated with a trans-impedance preamplifier (TIA) and MCU control unit. All modules satisfy class I laser safety requirements.

The transceivers are compatible with the Small Form Factor Pluggable Multi-Sourcing Agreement (MSA)1. They are compatible with Fibre Channel per FC-PI-2 Rev. 10.0. also simultaneously compatible with Gigabit Ethernet as specified in IEEE Std 802.3.

www.huihongfiber.com

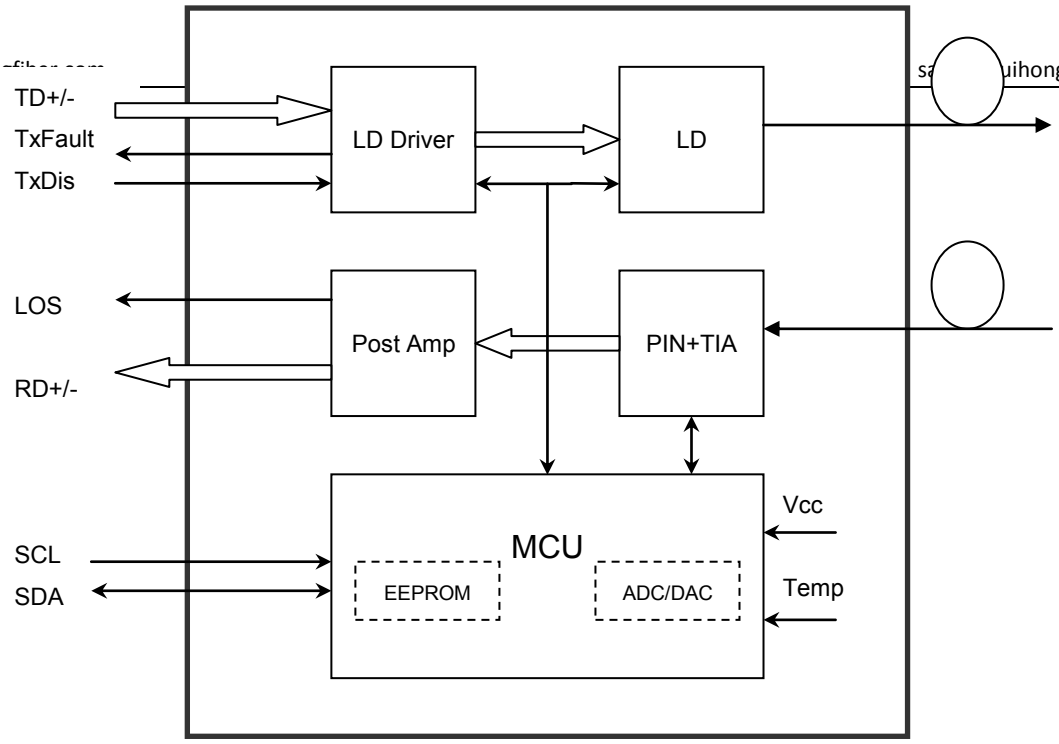

sales@huihongfiber.com

Absolute Maximum Ratings

Table 1 - Absolute Maximum Ratings

Parameter	Symbol	Min.	Max.	Units	Notes
Storage Temperature	Tst	-40	+85	°C	-
Operating Case Temperature	Tc	0	70	°C	-
Operating Humidity	RH	5	90	%	Non-condensing
Power Supply Voltage	Vcc-Vee	0	3.6	V	-

Recommended Operating Conditions

Table 2 - Recommended Operating Conditions

Parameter		Symbol	Min	Typical	Max	Unit
Operating Case Temperature	Standard	Tc	0		+70	°C
Power Supply Voltage		Vcc	3.13	3.3	3.47	V
Power Supply Current		Icc			240	mA

Optical and Electrical Characteristics

ONS SE 4G MM: (VCSEL and PIN, 850nm,500m Reach)

Table 3 - Optical and Electrical Characteristics

Parameter	Symbol	Min	Typical	Max	Unit	Notes
Transmitter						
Data Rate			4.25		Gb/S	
Centre Wavelength	λc	830		860	nm	
Spectral Width	Δλ			1	nm	
Average Output Power(BOL)	Pout	-9		-2.5	dBm	1
Extinction Ratio	ER	5			dB	

Average Launch Power-OFF Transmitter		Pout			-45	dBm	
Optical Eye Diagram		Fibre Channelb Compliant					
Optical Rise/Fall Time (20%~80%)		tr/tf			120	ns	
Data Input Swing Differential		V_{IN}	300		1800	mV	2
Input Differential Impedance		Z_{IN}	90	100	110	Ω	
TX Disable	Disable		2.0		Vcc	V	
	Enable		0		0.8	V	
TX Fault	Fault		2.0		Vcc	V	
	Normal		0		0.8	V	
Receiver							
Centre Wavelength		λc	830		860	nm	
Receiver Sensitivity(BOL)		Sen			-15	dBm	3
Receiver Overload		Sat	0			dBm	3
LOS De-Assert		LOS_D			-20	dBm	
LOS Assert		LOS_A	-25			dBm	
LOS Hysteresis			0.5		6	dB	
Receiver Reflectance					-20	dB	
Data Output Swing Differential		V_{out}	350		1800	mV	4
Loss of Signal (LOS) Assert Time		TAssert			500	nS	
Loss of Signal (LOS) Deassert Time		TDeassert			500	nS	
LOS		High	2.0		Vcc	V	
		Low			0.8	V	

Notes:

1. The optical power is launched into SMF.
2. PECL input, internally AC-coupled and terminated.
3. Measured with a PRBS 2^7-1 test pattern @4250Mbps, BER ≤1×10^{-12}.
4. CML Output,internally AC-coupled.

Timing and Electrical

Table 4 - Timing and Electrical

Parameter	Symbol	Min	Typical	Max	Unit
Tx Disable Negate Time	t_on			1	ms
Tx Disable Assert Time	t_off			10	μs
Time To Initialize, including Reset of Tx Fault	t_init			300	ms
Tx Fault Assert Time	t_fault			100	μs
Tx Disable To Reset	t_reset	10			μs
LOS Assert Time	t_loss_on			100	μs
LOS De-assert Time	t_loss_off			100	μs
Serial ID Clock Rate	f_serial_clock			400	KHz
MOD_DEF (0:2)-High	V_H	2		Vcc	V
MOD_DEF (0:2)-Low	V_L			0.8	V

Diagnostics

Table 5 – Diagnostics Specification

Parameter	Range	Unit	Accuracy	Calibration
Temperature	0 to +70	°C	±3°C	Internal / External
Voltage	3.0 to 3.6	V	±3%	Internal / External
Bias Current	0 to 100	mA	±10%	Internal / External
TX Power	-9 to -3	dBm	±3dB	Internal / External
RX Power	-23 to -3	dBm	±3dB	Internal / External

Digital Diagnostic Memory Map

The transceivers provide serial ID memory contents and diagnostic information about the present operating conditions by the 2-wire serial interface (SCL, SDA).

The diagnostic information with internal calibration or external calibration all are implemented, including received power monitoring, transmitted power monitoring, bias current monitoring, supply voltage monitoring and temperature monitoring.

The digital diagnostic memory map specific data field defines as following.

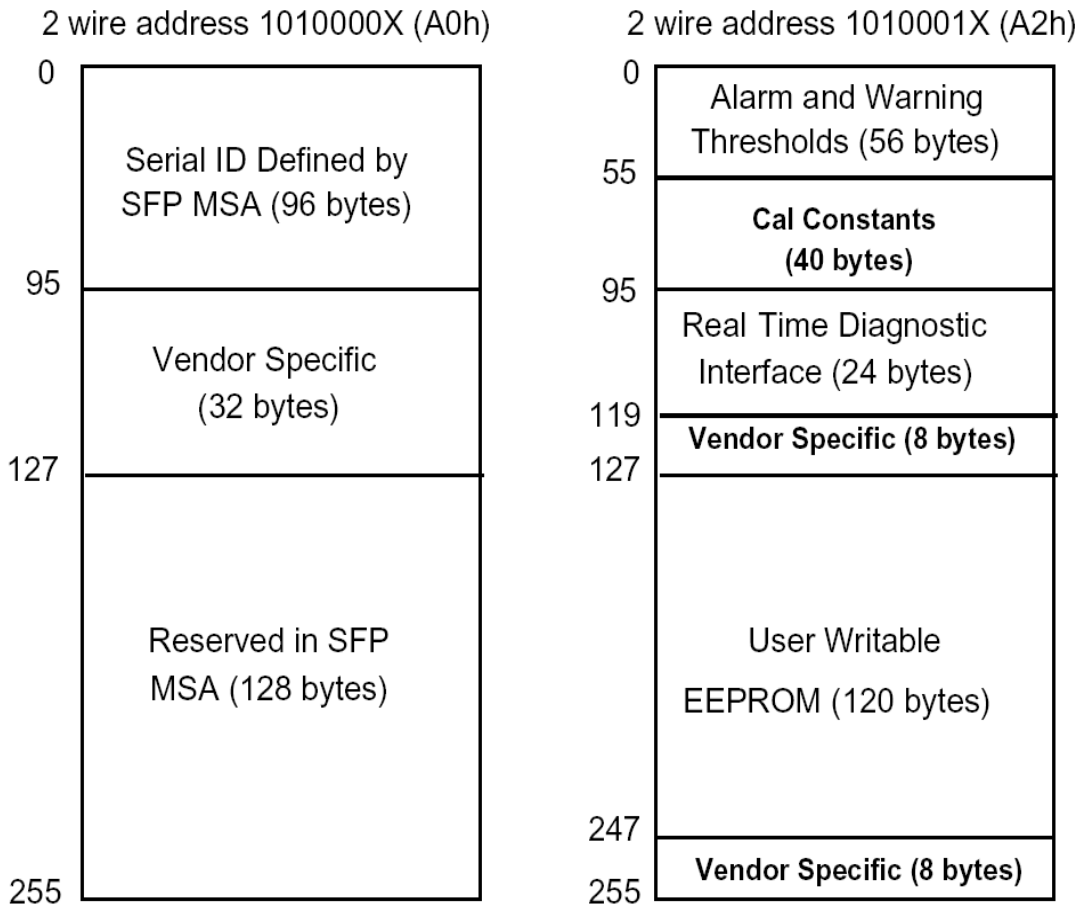

Pin Definitions

Pin Diagram

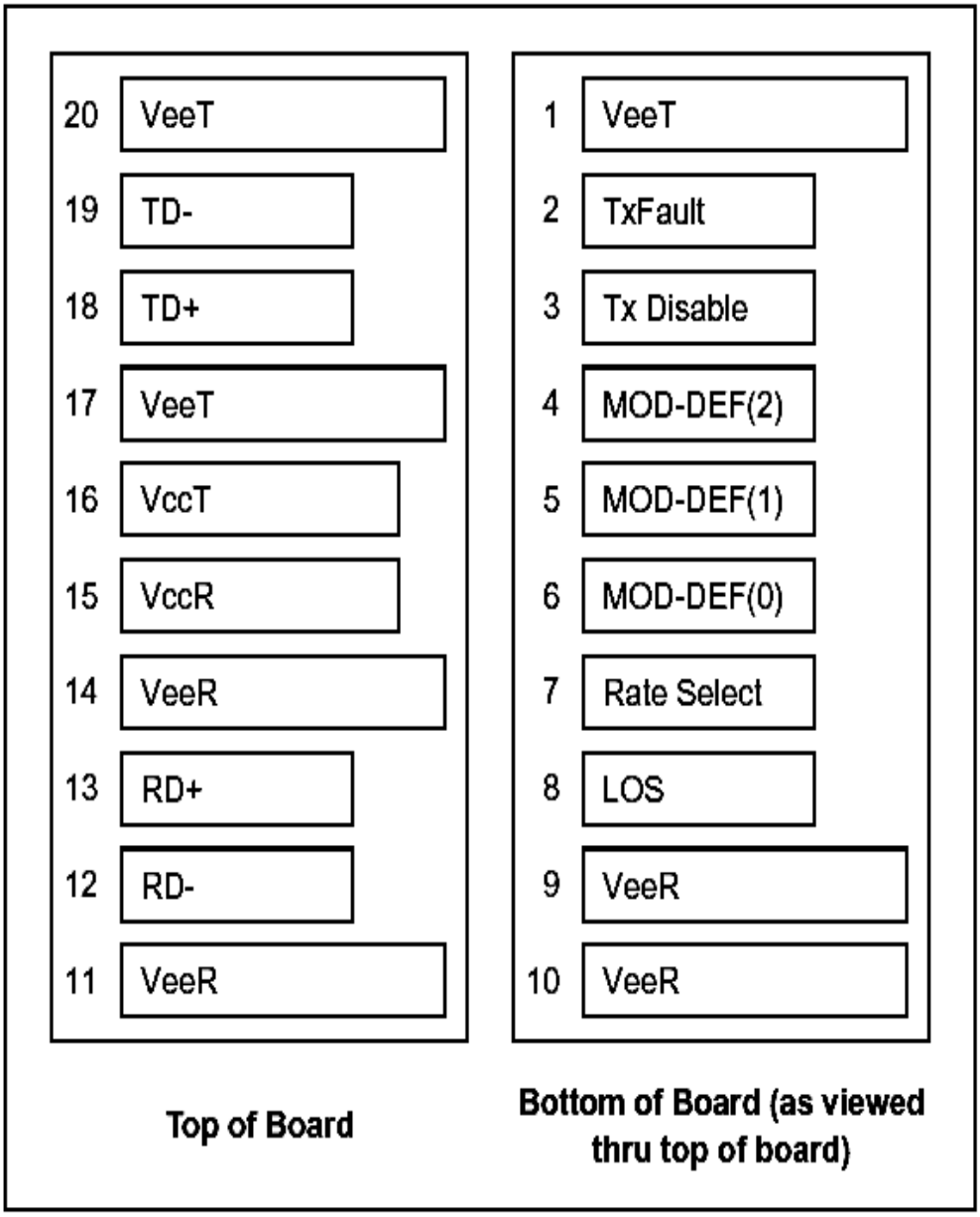

Pin Descriptions

Pin	Signal Name	Description	Plug Seq.	Notes
1	V_{EET}	Transmitter Ground	1	
2	TX FAULT	Transmitter Fault Indication	3	Note 1
3	TX DISABLE	Transmitter Disable	3	Note 2
4	MOD_DEF(2)	SDA Serial Data Signal	3	Note 3
5	MOD_DEF(1)	SCL Serial Clock Signal	3	Note 3
6	MOD_DEF(0)	TTL Low	3	Note 3

7	Rate Select	Not Connected	3	
8	LOS	Loss of Signal	3	Note 4
9	V_{EER}	Receiver ground	1	
10	V_{EER}	Receiver ground	1	
11	V_{EER}	Receiver ground	1	
12	RD-	Inv. Received Data Out	3	Note 5
13	RD+	Received Data Out	3	Note 5
14	V_{EER}	Receiver ground	1	
15	V_{CCR}	Receiver Power Supply	2	
16	V_{CCT}	Transmitter Power Supply	2	
17	V_{EET}	Transmitter Ground	1	
18	TD+	Transmit Data In	3	Note 6
19	TD-	Inv. Transmit Data In	3	Note 6
20	V_{EET}	Transmitter Ground	1	

Notes:

Plug Seq.: Pin engagement sequence during hot plugging.

1) TX Fault is an open collector output, which should be pulled up with a 4.7k~10kΩ resistor on the host board to a voltage between 2.0V and Vcc+0.3V. Logic 0 indicates normal operation; Logic 1 indicates a laser fault of some kind. In the low state, the output will be pulled to less than 0.8V.

2) TX Disable is an input that is used to shut down the transmitter optical output. It is pulled up within the module with a 4.7k~10kΩ resistor. Its states are:

   Low (0 to 0.8V): Transmitter on

   (>0.8V, < 2.0V): Undefined

   High (2.0 to 3.465V): Transmitter Disabled

   Open: Transmitter Disabled

3) Mod-Def 0,1,2. These are the module definition pins. They should be pulled up with a 4.7k~10kΩ resistor on the host board. The pull-up voltage shall be VccT or VccR.

   Mod-Def 0 is grounded by the module to indicate that the module is present

   Mod-Def 1 is the clock line of two wire serial interface for serial ID

   Mod-Def 2 is the data line of two wire serial interface for serial ID

4) LOS is an open collector output, which should be pulled up with a 4.7k~10kΩ resistor. Pull up voltage between 2.0V and Vcc+0.3V. Logic 1 indicates loss of signal; Logic 0 indicates normal operation. In the low state, the output will be pulled to less than 0.8V.

5) RD-/+: These are the differential receiver outputs. They are internally AC-coupled 100 differential lines which should be terminated with 100Ω (differential) at the user SERDES.

6) TD-/+: These are the differential transmitter inputs. They are internally AC-coupled, differential lines with 100Ω differential termination inside the module.

Recommended Interface Circuit

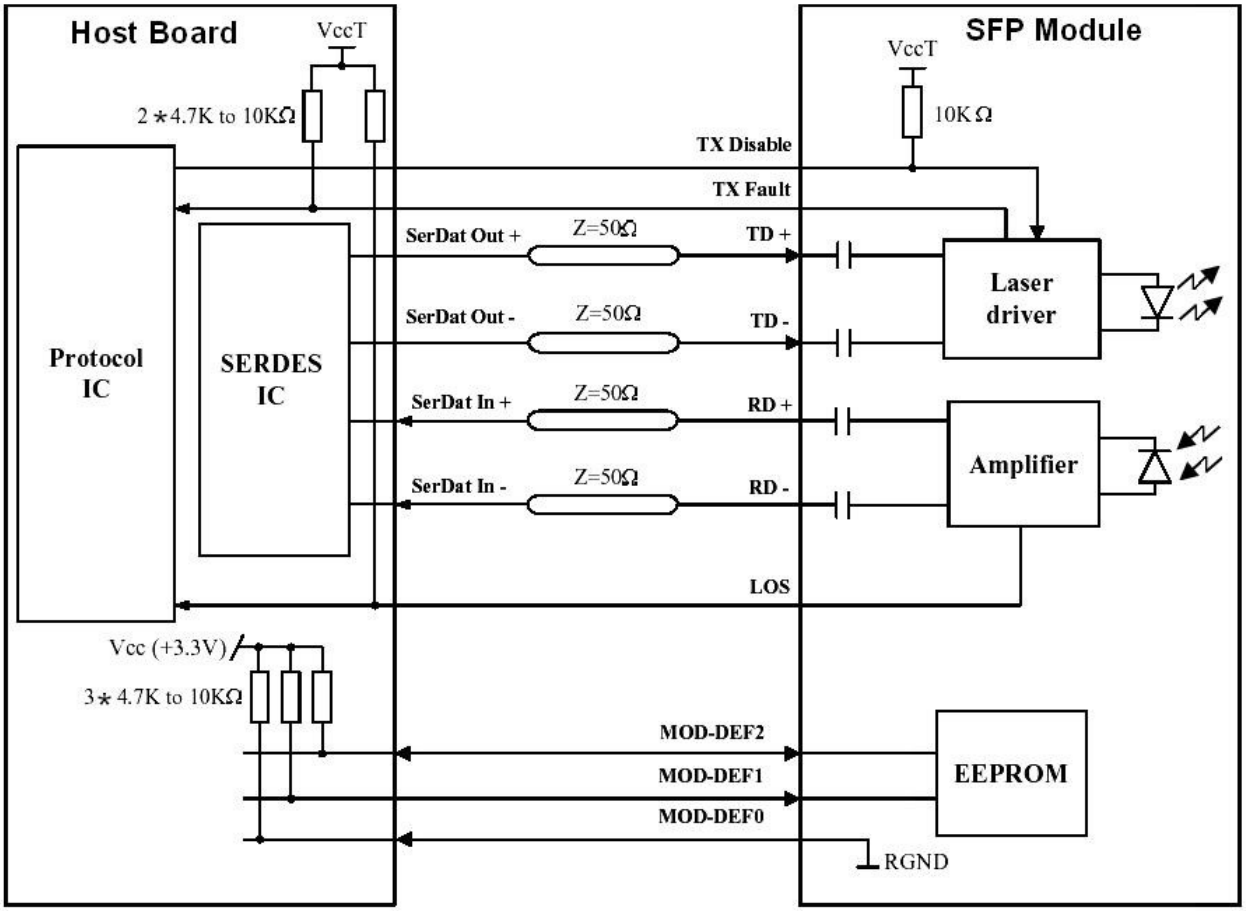

Mechanical Dimensions

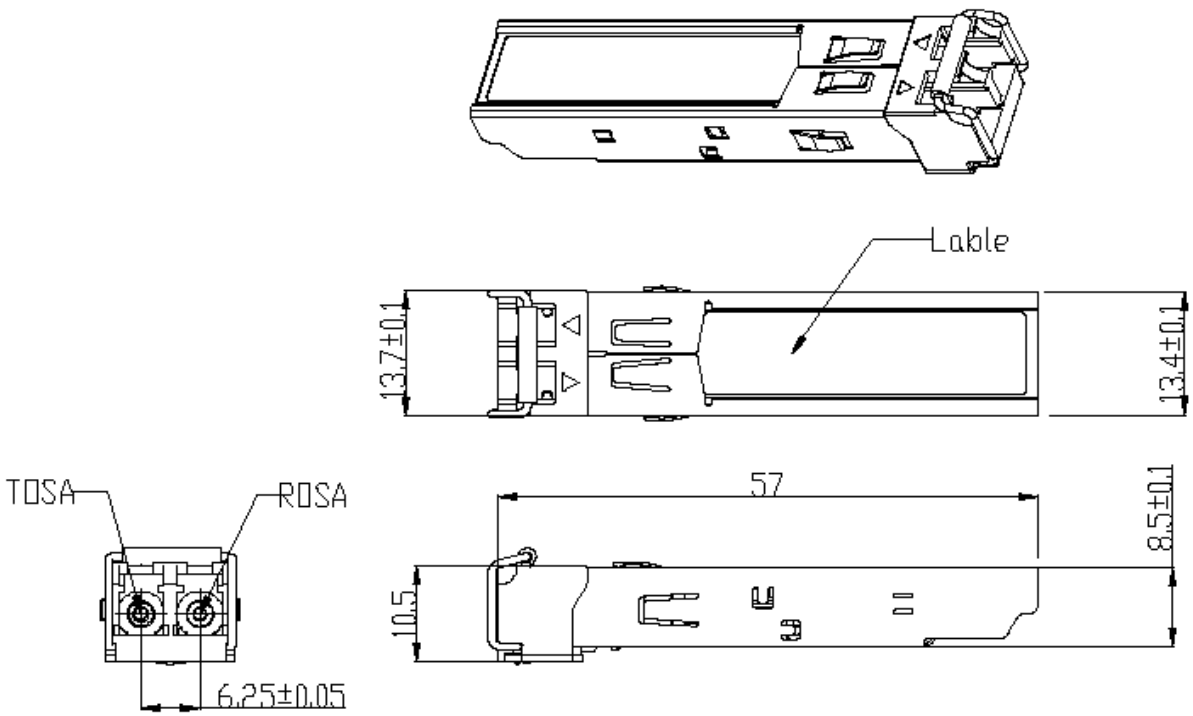

Ordering information

Part Number	Product Description
HONS-SE-4G-MM	850nm, 4.25Gbps, 550m, 0ºC ~ +70ºC, With Digital Diagnostic Monitoring